FORM MS-5424-82
REPLACES FORM MS-5424-32
FILE IN SECT. 2 OF SERVICE MANUAL

Illustrated Parts List

MODEL SERIES

243430 to 243475

TYPE NUMBERS
0010 through 0024
0110 through 0200
0510 through 0524
0610 through 0667

TO FIND THE CORRECT NUMBER OF THE PART YOU NEED: FOLLOW THE INSTRUCTIONS BELOW

A. Refer to Engine Model, Type and Code Number that is stamped on the blower housing or name plate of engine. Engine type numbers such as 0123 01 are listed herein only as 0123. The two digits (01 or 02, etc.) to the right of the space are not needed for parts identification. Then use the Illustrated Parts List covering these Model Series.

B. Refer to Illustrated Parts section and compare the old part with illustration. The number on the illustration is the Reference Number. Assemblies include all parts shown in frames. All parts shown in assembly frames on which individual reference numbers are given can be purchased separately.

C. After the Reference Number has been identified, refer to the Numerical Parts List, where Reference and Master Part Numbers are listed. THE MASTER PART IS USED ON ALL TYPE NUMBERS EXCEPT THOSE TYPE NUMBERS UNDER "NOTE".

D. If a "Note" appears below the Master Part Number, this means that this part differs from the Master Part for certain types. If the Type Number is listed under "Note", order the part referred to.

E. If the Engine Type Number does not appear after any part number listed under "Note", use the Master Part Number.

F. For Type Numbers higher than those covered by this book, please refer to the factory if you are unable to identify the part by comparison.

Printed in U.S.A.

ORIGINAL BRIGGS & STRATTON SERVICE PARTS ®

243430 to 243475

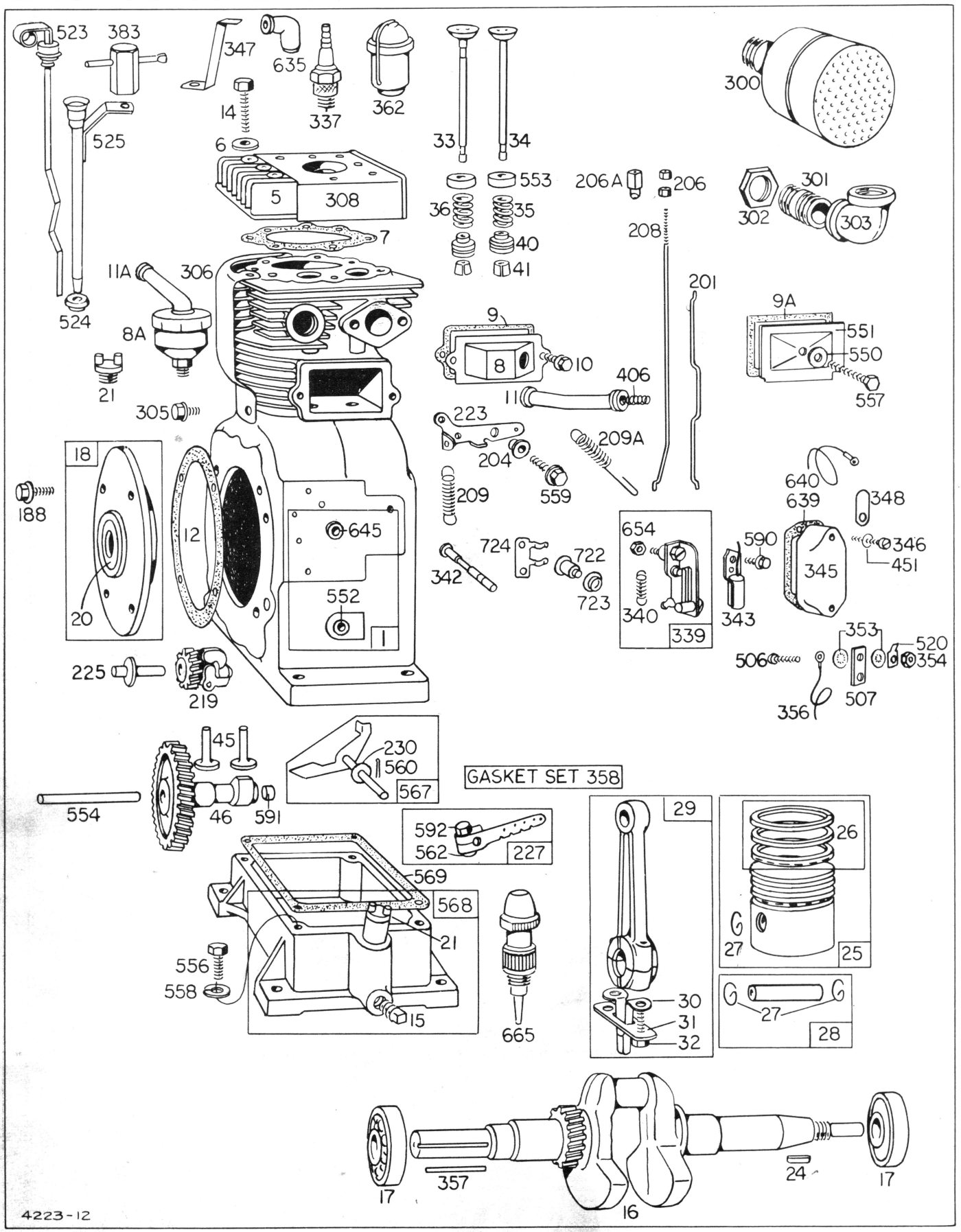

Assemblies include all parts shown in frames.

243430 to 243475

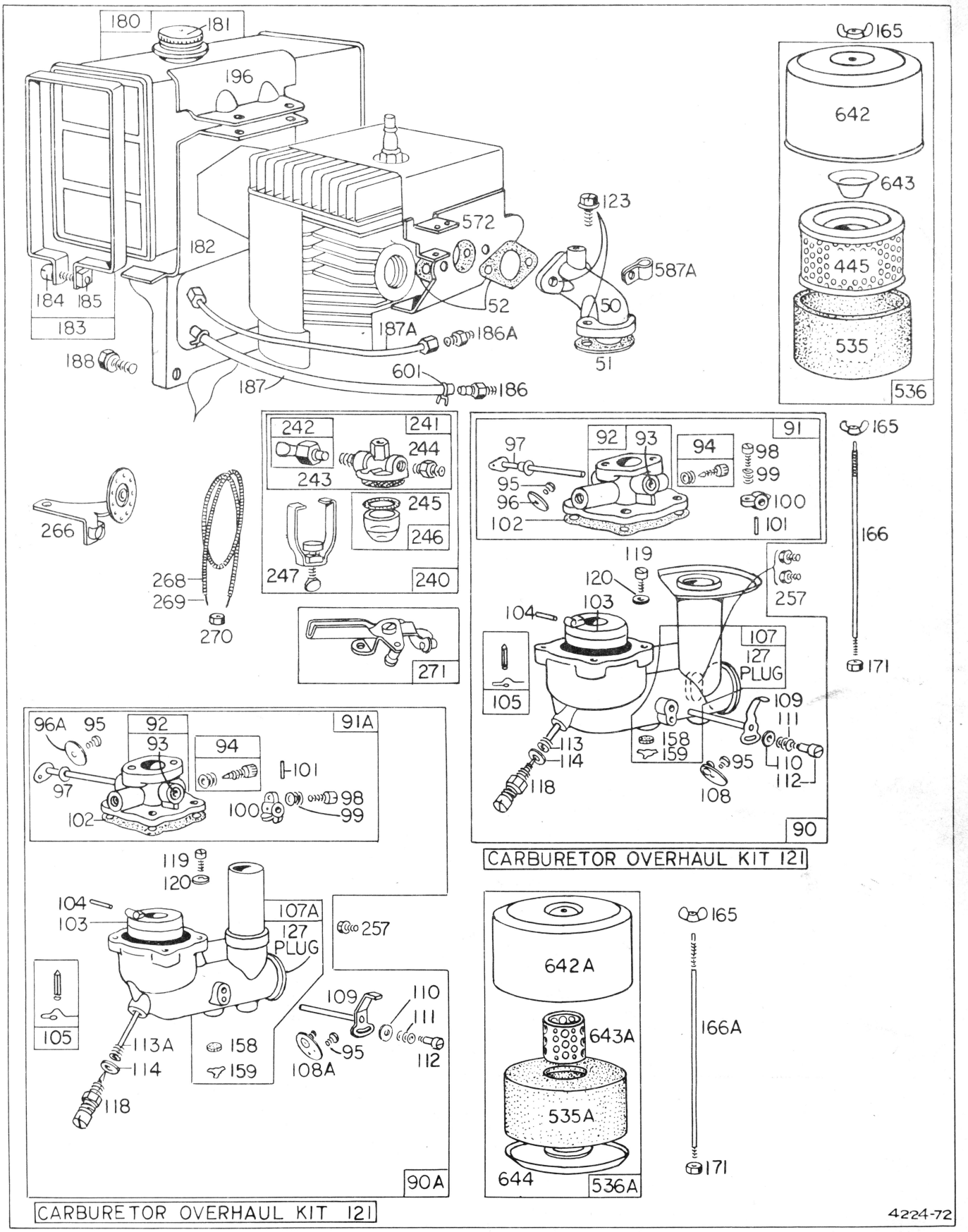

Assemblies include all parts shown in frames.

243430 to 243475

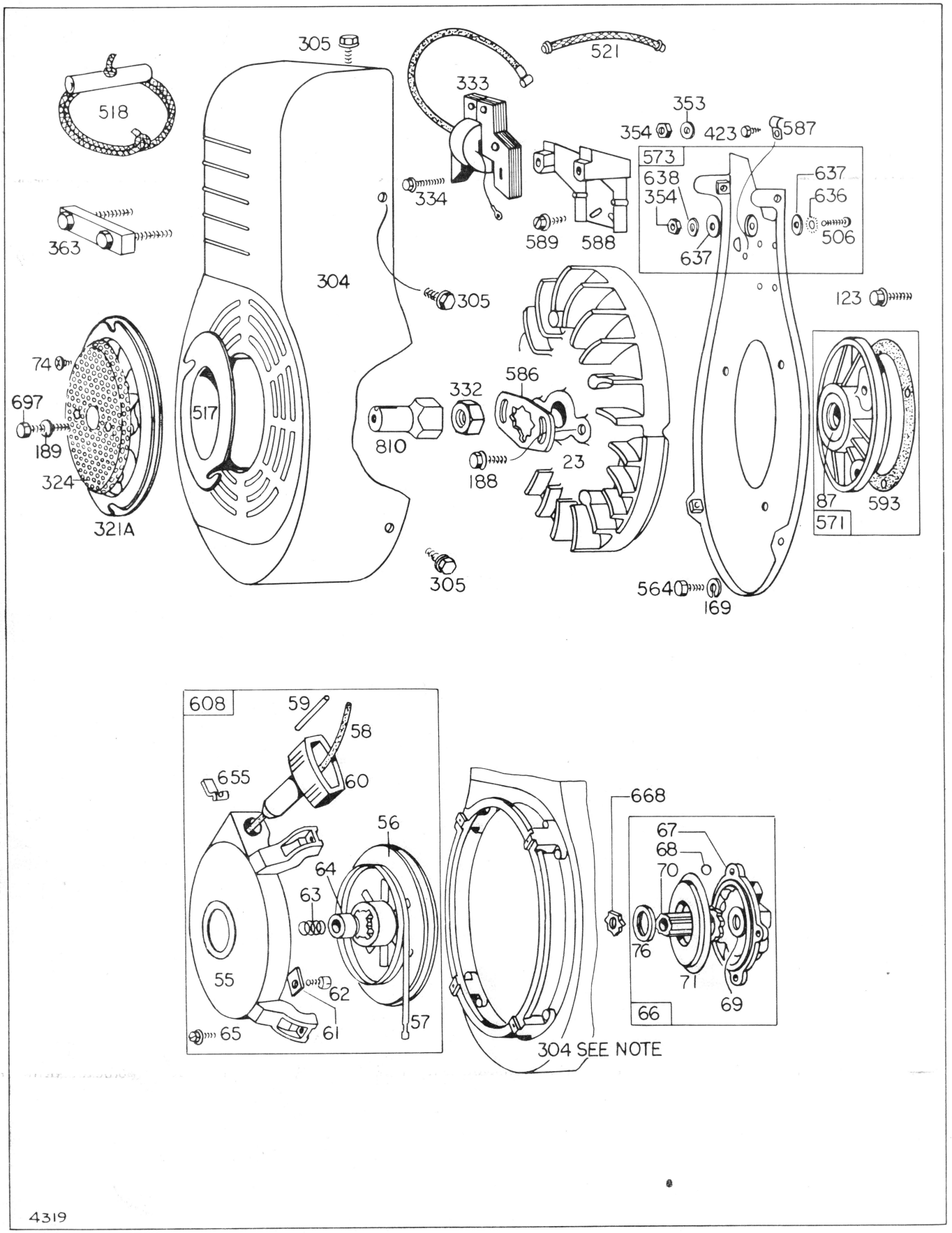

Assemblies include all parts shown in frames.

243430 to 243475

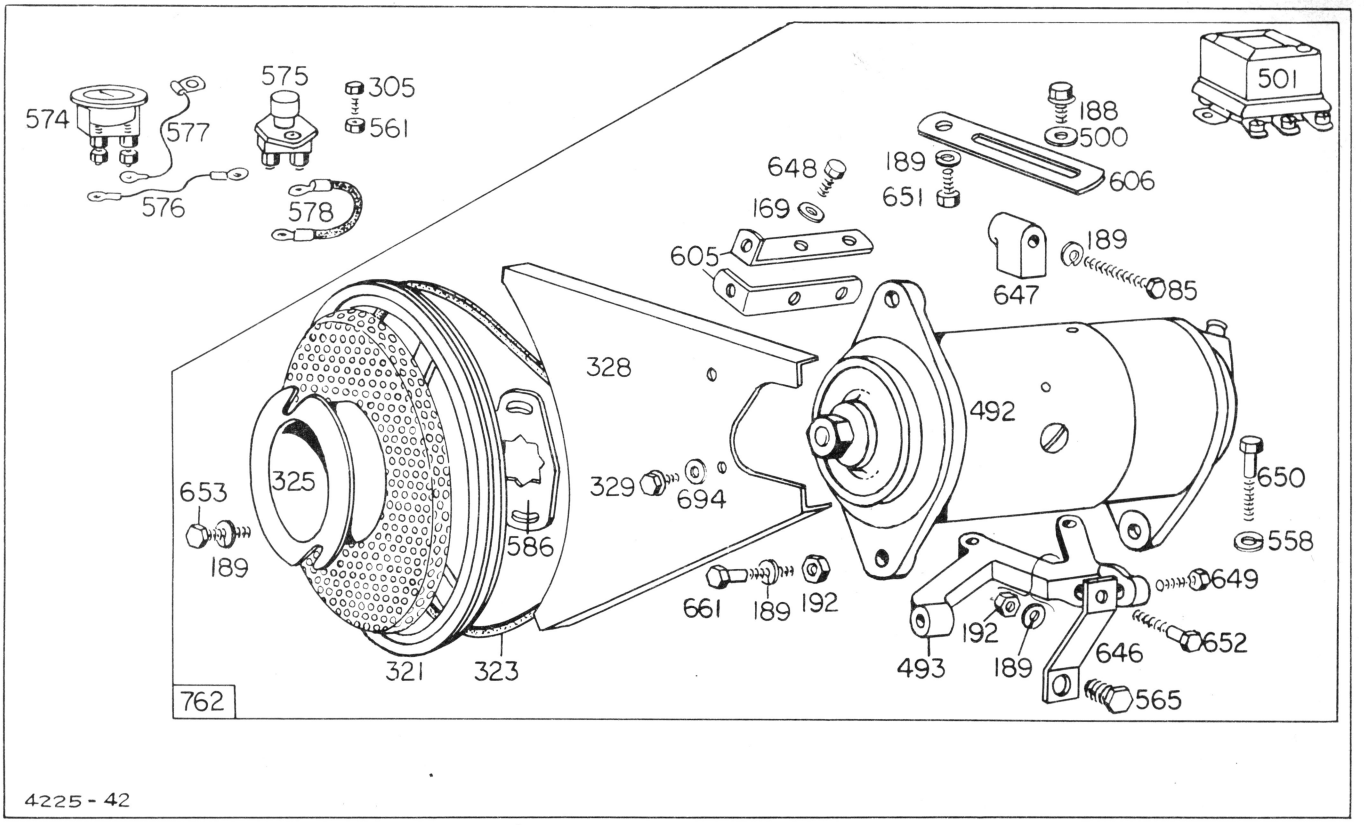

Assemblies include all parts shown in frames.

REF. NO.	PART NO.	DESCRIPTION
1	**299078**	Cylinder Assembly
5	**211430**	Head–Cylinder
	Note:	**211660** Head–Cylinder Used on type Nos. 0131, 0137, 0150, 0152, 0165.
6	**22963**	Washer–Cylinder Head
7	***270273**	Gasket–Cylinder Head
8	**299328**	Breather Used after Code No. 6607211.
8A	**297704**	Breather Used before Code No. 6607221.
9	**27803**	Gasket–Valve Cover Used after Code No. 6607211.
9A	***66214**	Gasket–Valve Cover
10	**93394**	Screw–Breather Mtg. Sem Used after Code No. 6607211.
11	**68818**	Tube–Breather Used after Code No. 6607211.
11A	**67068**	Tube–Breather Used before Code No. 6607221.
12	***27350**	Gasket–Crankcase Cover
14	**92674**	Screw–Cylinder Head (9)
	Note:	**93211** Screw–Cylinder Head (2) **22963** Washer (2) For mounting Bracket and Cylinder Head on type Nos. 0192, 0193, 0648, 0649, 0653, 0656. **93583** Stud–Cylinder Head (2) (with hexagon section) **93211** Screw–Cylinder Head (2) **22963** Washer (2) Used for mounting Bracket and Cylinder Head on type Nos. 0148, 0178. **93583** Stud–Cylinder Head (5) (with hexagon section) Used on type No. 0661.
15	**91084**	Plug–Pipe–3/8"
	Note:	**93418** Plug–Oil Drain (Hex. Socket) Used on type No. 0653, 0656, 0657, 0660.
16	**260895**	Crankshaft
	Note:	**260885** Crankshaft Used on type Nos. 0021, 0024, 0112, 0116, 0139, 0165, 0166, 0186, 0524, 0612, 0616, 0644. **260887** Crankshaft Used on type Nos. 0022, 0143, 0167, 0172, 0173, 0174, 0177, 0185, 0190, 0194, 0198, 0522, 0615, 0631, 0635, 0636, 0641, 0647, 0659, 0664. **260927** Crankshaft Used on type No. 0137. **260998 Crankshaft** Used on type Nos. 0148, 0178. **261109** Crankshaft Used on type Nos. 0192, 0193, 0648. **261153** Crankshaft Used on type Nos. 0200, 0655. **261159** Crankshaft Used on type Nos. 0626, 0627, 0630, 0665. **261192** Crankshaft Used on type Nos. 0649, 0653, 0656.

* Included in Gasket Set–Part No. 299101.

243430 to 243475

REF. NO.	PART NO.	DESCRIPTION
		261215 Crankshaft Used on type Nos. 0619, 0660, 0661, 0666.
17	291667	Bearing–Ball
18	291665	Cover Assembly–Crankcase
	Note:	**291710** Cover Assy.–Crankcase Used on type Nos. 0024, 0124, 0139, 0149, 0166, 0170, 0200, 0524, 0655. **390054** Cover Assy.–Crankcase Used on type Nos. 0022, 0143, 0167, 0172, 0177, 0194, 0522, 0635, 0647. **390114** Cover Assy.–Crankcase Used on type Nos. 0173, 0174, 0185, 0190, 0198, 0615, 0631, 0636, 0641, 0659, 0664. **391062** Cover Assy.–Crankcase Used on type Nos. 0626, 0627, 0630, 0665.
20	291675	Seal–Oil
	Note:	**299539** Seal–Oil Used on type Nos. 0022, 0143, 0167, 0172, 0173, 0174, 0177, 0185, 0190, 0194, 0198, 0522, 0615, 0631, 0635, 0636, 0641, 0647, 0659, 0664. **299609** Seal–Oil Used on type Nos. 0626, 0627, 0630, 0665.
21	66768	Plug–Oil Filler
23	298975	Flywheel–Magneto
	Note:	**391116** Flywheel–Magneto Used on type No. 0650.
24	61760	Key–Flywheel
25	299085	Piston Assembly–Standard
	299086	Piston Assembly–.010" O.S.
	299087	Piston Assembly–.020" O.S.
	299088	Piston Assembly–.030" O.S.
PISTON RING SETS:		
	Note:	For Chrome Piston Ring Set – Standard Size – order Part No. 299744.

* Included in Gasket Set–Part No. 299101.

REF. NO.	PART NO.	DESCRIPTION
26	299089	Ring Set–Piston–Std. Consists of: **211428** Ring–Piston, Comp., Top, Standard **211500** Ring–Piston, Comp., Center, Std. **299081** Ring–Piston, Oil, Std. (w/expander)
	299090	Ring Set–Piston–.010" O.S. Consists of: **211534** Ring–Piston, Comp., Top, .010" O.S. **211535** Ring–Piston, Comp., Center, .010" O.S. **299082** Ring–Piston, Oil, .010" O.S. (w/expander)
	299091	Ring Set–Piston–.020" O.S. Consists of: **211537** Ring–Piston, Comp., Top, .020" O.S. **211538** Ring–Piston Comp., Center, .020" O.S. **299083** Ring–Piston, Oil, .020" O.S. (w/expander)
	299092	Ring Set–Piston–.030" O.S. Consists of: **211540** Ring–Piston, Comp., Top, .030" O.S. **211541** Ring–Piston, Comp., Center, .030" O.S. **299084** Ring–Piston, Oil, .030" O.S. (w/expander)
27	68546	Lock–Piston Pin
28	298401	Pin Assembly–Piston–Standard
	294681	Pin Assembly–Piston–.005" O.S.
29	299080	Rod Assembly–Connecting
	Note:	For Connecting Rod with .020" undersize Crankpin Bore – order No. 390305.
30	221777	Dipper–Connecting Rod
31	221776	Lock–Connecting Rod Screw
32	230557	Screw–Connecting Rod
33	26736	Valve–Exhaust
34	23923	Valve–Intake
35	26828	Spring–Intake Valve
36	26828	Spring–Exhaust Valve

REF. NO.	PART NO.	DESCRIPTION
40	292260	Rotocoil–Exhaust and Intake Valve
41	68283	Collar–Valve Spring
45	26670	Tappet–Valve
46	211335	Gear–Cam
50	211419	Elbow–Carburetor Intake
	Note:	**211589** Elbow–Carburetor Intake Used on type Nos. 0147, 0148, 0178, 0192, 0193, 0626, 0627, 0630, 0639, 0648, 0649, 0653, 0656, 0665.
51	† *270267	Gasket–Intake Elbow
52	*27381	Gasket–Intake Elbow Mounting
55	298402	Housing–Rewind Starter
56	295871	Pulley–Rewind Starter
57	294303	Spring–Rewind Starter
58	66564	Rope–Rewind Starter
59	230228	Pin–Starter Grip
60	66728	Grip–Starter Rope
61	68848	Bumper–Starter Pulley
62	93254	Screw–Pulley Bumper Mounting Sem
63	260414	Spring–Ratchet
64	230543	Adapter–Ratchet Spring
65	93062	Screw–Rewind Starter Housing Mtg. Sem
66	298798	Clutch Assembly–Rewind Starter
67	211383	Housing–Rewind Starter
68	63770	Ball–Clutch
69	66718	Washer–Starter Clutch Thrust
70	298799	Ratchet–Rewind Starter Clutch
71	221653	Washer–Retainer
74	93521	Screw–Rotating Screen Mounting
76	68238	Seal–Ratchet Sealing
85	92909	Screw–Link Anchor Mounting
87	298423	Seal–Oil
90	391073	Carburetor Assembly
	Note:	**390959** Carburetor Assembly Used on type Nos. 0625, 0666. **391074** Carburetor Assembly Used on type Nos. 0626, 0627, 0630, 0639, 0648, 0649, 0651, 0652, 0653, 0656, 0665, 0667.
90A	298762	Carburetor Assembly Used on type Nos. 0010 to 0201 except those under Note.

† Included in Carburetor Overhaul Kit–Part No. 299720.

REF. NO.	PART NO.	DESCRIPTION
	Note:	**298840** Carburetor Assembly Used on type Nos. 0123, 0124, 0132, 0133, 0147, 0148, 0149, 0156, 0169, 0176, 0178, 0191, 0192, 0193, 0196. **299315** Carburetor Assembly Used on type No. 0122. **299323** Carburetor Assembly Used on type Nos. 0131, 0137, 0150, 0152, 0165.
91	391034	Body Assembly–Upper Carburetor Used on type Nos. 0510 and up.
91A	299098	Body Assembly–Upper Carburetor Used on type Nos. 0010 to 0201.
92	298759	Body–Upper Carburetor
93	23108	Bushing–Throttle Shaft
94	† 292681	Valve Assembly–Carburetor Idle
95	93038	Screw–Choke and Throttle Valve Mtg. Sem
96	221939	Valve–Throttle Used on type Nos. 0510 and up.
96A	221742	Valve–Throttle Used on type Nos. 0010 to 0201.
97	298535	Shaft Assembly–Throttle
98	91920	Screw–Machine, Fill. Hd. –8-32 x 5/8"
99	26157	Spring–Throttle Adjustment
100	61967	Stop–Throttle
101	93043	Pin–Throttle Lever
102	† 270268	Gasket–Carburetor Body
103	298514	Float–Carburetor
104	† 230896	Pin–Float Hinge
105	† 299096	Valve–Fuel Inlet
107	391066	Body Assembly–Lower Carburetor
	Note:	**391069** Body Assy.–Lower Carburetor Used on type Nos. 0626, 0627, 0630, 0639, 0648, 0649, 0652, 0653, 0656, 0665, 0667.
107A	299099	Body Assembly–Lower Carburetor
	Note:	**299100** Body Assy.–Lower Carburetor Used on type Nos. 0123, 0124, 0132, 0133, 0147, 0148, 0149, 0156, 0169, 0176, 0178, 0191, 0192, 0193, 0196. **299517** Body Assy.–Lower Carburetor Used on type No. 0122.
108	390936	Valve–Choke
108A	298730	Valve–Choke
109	298534	Shaft And Lever–Choke
	Note:	**298622** Shaft and Lever–Choke Used on type Nos. 0123, 0124, 0132, 0133, 0147, 0148, 0149, 0156, 0169, 0176, 0178, 0191, 0192, 0193, 0196, 0626, 0627, 0630, 0639, 0648, 0649, 0652, 0653, 0656, 0665, 0667.
110	62899	Washer–Choke Lever
111	26155	Spring–Choke Lever
112	23123	Screw–Choke Lever
113	390950	Nozzle–Carburetor
113A	† 390395	Nozzle–Carburetor
114	† 68667	Gasket–Nozzle
118	† 99525	Valve Assembly–Needle
	Note:	**391213** Valve Assy.–Needle Uses: **292226** Retainer Assy.–Needle Valve **68677** Packing–Needle Valve **23118** Nut–Needle Valve Packing Used on type Nos. 0131, 0137, 0150, 0152, 0165.
119	90746	Screw–Machine, Fill. Hd. –10-32 x 5/8"
120	92290	Washer–Lock–No. 10 x 1/16 x 3/64"
121	299720	Carburetor Overhaul Kit
123	93415	Screw–Sem
	Note:	**93357** Screw–Carb. Mounting (4) Used on type Nos. 0147, 0148, 0178, 0192, 0193, 0626, 0627, 0630, 0639, 0648, 0649, 0653, 0656, 0665.
127	221747	Plug–Welch
158	27590	Filter–Carburetor Drain
159	220521	Retainer–Carburetor Drain Filter
165	93453	Nut–Wing
	Note:	**93294** Screw–Sem **62199** Washer (Spacer is furnished by equipment manufacturer) Used on type Nos. 0123, 0176, 0196.
166	231007	Stud–Air Cleaner
166A	230768	Stud–Air Cleaner
	Note:	**230639** Stud–Air Cleaner Used on type No. 0189. **230840** Stud–Air Cleaner Used on type Nos. 0123, 0176, 0196. **230877** Stud–Air Cleaner Used on type No. 0122.
169	90832	Washer–Lock–1/4 x 3/32 x 5/64"
171	92129	Nut–Hex. –1/4-28
180	291488	Tank Assembly–Fuel (6 Quart)
	Note:	**290816** Tank Assy.–Fuel (4 Quart) Used on type Nos. 0130, 0190, 0636, 0661. **291513** Tank Assy.–Fuel (Gasoline–Kerosene) Used on type Nos. 0131, 0137, 0150, 0152, 0165. **292415** Tank Assy.–Fuel (8 Quart) Used on type Nos. 0125, 0140, 0154, 0157, 0179, 0187, 0644, 0654, 0657, 0660.
181	69221	Cap–Fuel Tank
	Note:	**297866** Cap–Fuel Tank Used on type Nos. 0181, 0645.
182	22813	Bracket–Fuel Tank
183	291490	Strap Assy.–Fuel Tank
	Note:	**291367** Strap Assy.–Fuel Tank Used on type Nos. 0130, 0190, 0636, 0661.
184	91257	Screw–Machine, Fill. Hd. –1/4-20 x 1-1/4"
185	90970	Nut–Square–1/4-20
186	230318	Connector–Fuel Pipe (For Flexible Tubing)
	Note:	**67218** Connector–Fuel Pipe (Elbow) Used on type Nos. 0123, 0147, 0176,

† Included in Carburetor Overhaul Kit–Part No. 299720.

243430 to 243475

REF. NO.	PART NO.	DESCRIPTION
		0196, 0626, 0627, 0630, 0631, 0639, 0665.
186A	53029	Connector–Fuel Pipe (For Metal Fuel Pipe)
187	299942	Pipe–Fuel (Flexible Tubing)
187A	298861	Pipe–Fuel (Metal)
	Note:	**299322** Pipe–Fuel–20" long (Metal) **89248** Pipe–Fuel–2-1/4" long (Metal) **92655** Tee Used on type Nos. 0131, 0137, 0150, 0152, 0165.
188	93535	Screw–Sem
189	90366	Washer–Lock–5/16 x 1/8 x 1/16"
192	91397	Nut–Hex. 5/16-18
196	22907	Support–Upper Fuel Tank
201	26725	Link–Throttle
	Note:	**260923** Link–Throttle Used on type Nos. 0147, 0148, 0178, 0192, 0193, 0626, 0627, 0630, 0639, 0648, 0649, 0653, 0656, 0665.
204	23849	Bushing–Control Lever
	Note:	**230919** Bushing–Control Lever Used on type Nos. 0148, 0178, 0192, 0193, 0648, 0649, 0653, 0656.
206	93422	Nut–Governor Adjusting
206A	21772	Nut–Governor Adjusting
208	230040	Rod–Governor Control
209	260815	Spring–Governor (2" long)
	Note:	**26764** Spring–Governor Used on type Nos. 0022, 0024, 0116, 0117, 0135, 0136, 0143, 0145, 0146, 0150, 0152, 0153, 0154, 0157, 0158, 0160, 0164, 0165, 0166, 0167, 0168, 0169, 0170, 0172, 0173, 0174, 0175, 0177, 0179, 0185, 0190, 0191, 0194, 0198, 0522, 0524, 0616, 0617, 0628, 0629, 0631, 0635, 0636, 0637, 0638, 0641, 0644, 0647, 0650, 0654, 0657, 0659, 0660, 0662, 0663, 0664, 0667.
209A	260816	Spring–Governor (2-1/2" long)
219	291192	Gear Assembly–Governor
223	22814	Lever–Governor Control
	Note:	**221987** Lever–Gov. Control Used with No. 22814 Lever on type Nos. 0148, 0178, 0192, 0193, 0648, 0649, 0653, 0656. **299428** Lever–Gov. Control Used on type No. 0140.
225	291177	Shaft–Governor Gear
227	298399	Lever Assy.–Governor
	Note:	**291365** Lever Assy.–Governor Used on type Nos. 0022, 0024, 0116, 0117, 0135, 0136, 0143, 0145, 0146, 0150, 0152, 0153, 0154, 0157, 0158, 0160, 0164, 0165, 0166, 0167, 0168, 0169, 0170, 0172, 0173, 0174, 0175, 0177, 0179, 0185, 0190, 0191, 0194, 0198, 0522, 0524, 0616, 0617, 0628, 0629, 0631, 0635, 0636, 0637, 0638, 0641, 0644, 0647, 0650, 0654, 0657, 0659, 0660, 0662, 0663, 0664, 0667.
230	22826	Washer–Governor Crank
240	295984	Filter Assy.–Fuel Used with Flexible Fuel Pipe.
	Note:	**99910** Filter Assy.–Fuel Used with Metal Fuel Pipe. **297563** Outlet Assy. (At Tank) **298090** Filter (In Fuel Pipe) Used on type Nos. 0130, 0186, 0631, 0661.
241	296005	Cover Assy.–Fuel Filter Used with Flexible Fuel Pipe
	Note:	**99909** Cover Assy.–Fuel Filter Used with Metal Fuel Pipe.
242	295913	Valve–Fuel Shut-off
	Note:	**293934** Valve–Fuel Shut-off Used on type No. 0130.
243	22547	Screen–Fuel Filter
244	230318	Connector–Fuel Pipe Used with Flexible Fuel Pipe
	Note:	**53029** Connector–Fuel Pipe Used with Metal Fuel Pipe
245	*68477	Gasket–Fuel Filter Bowl
246	298683	Bowl–Fuel Filter
247	99665	Yoke Assy.–Fuel Filter
257	93543	Screw–Control Wire Casing to Carburetor Mounting
	Note:	**93107** Screw–Casing Clamp **22372** Clamp–Casing **221988** Bracket–Casing Clamp Used on type Nos. 0148, 0178, 0192, 0193, 0648, 0649, 0653, 0656.
266	299361	Control–Throttle
268	65616	Casing–Control Wire–72" long
	Note:	If longer casing is required, specify length in inches; if shorter casing is needed, order No. 65616 and cut to required length.
269	26633	Wire–Control–78" long
	Note:	If longer wire is required, specify length in inches; if shorter wire is needed, order No. 26633 and cut to required length.
270	63426	Locknut–Control Wire Casing
271	290568	Lever Assy.–Control
	Note:	**93469** Screw–Sem Used to mount Control Lever on type Nos. 0120, 0121, 0162, 0163.
300	290933	Muffler–Exhaust
	Note:	**291519** Muffler–Exhaust Used on type Nos. 0161, 0657, 0660. **299477** Muffler–Exhaust Used on type Nos. 0148, 0178, 0192, 0648.
301	91416	Nipple–Exhaust, Pipe

* Included in Gasket Set–Part No. 299101.

REF. NO.	PART NO.	DESCRIPTION
302	91310	Locknut–Muffler
303	91296	Elbow–Exhaust 90°, Pipe
	Note:	**91308** Elbow–Exhaust–90° Street Used on type Nos. 0122, 0171, 0196, 0625, 0626, 0627, 0630, 0632, 0665, 0666.
304	291407	Housing–Blower
	Note:	**294698** Housing–Blower Used on type Nos. 0118, 0121, 0123, 0124, 0140, 0147, 0148, 0149, 0159, 0176, 0178, 0184, 0186, 0189, 0192, 0193, 0200, 0618, 0626, 0627, 0630, 0639, 0642, 0648, 0649, 0655, 0665. **297010** Housing–Blower Used on type Nos. 0619, 0661, 0666. **391263** Housing–Blower Used on type No. 0660. **297453** Housing–Blower Used on type Nos. 0023, 0129, 0132, 0135, 0137, 0146, 0160, 0163, 0164, 0183, 0194, 0199, 0523, 0632, 0637, 0640, 0652, 0653, 0656, 0662. **297766** Housing–Blower Used on type Nos. 0020, 0195, 0197, 0644, 0651, 0657.
305	93158	Screw–Sem
	Note:	**93415** Screw–Sem **92278** Nut–Hex.–1/4-20 **90366** Washer–Lock Used to mount Starter Switch to Panel on type Nos. 0023, 0129, 0135, 0146, 0163, 0178, 0183, 0523, 0637, 0640, 0658, 0662. **93542** Nut–Clip Used to mount Blower Housing to Cylinder Head Cover on type Nos. 0147, 0148, 0178, 0192, 0193, 0639, 0649, 0653, 0656.
306	221795	Shield–Cylinder
	Note:	**299542** Shield–Cyl. Used on type Nos. 0147, 0148, 0178, 0192, 0193, 0639, 0648, 0649, 0653, 0656.
308	291866	Cover–Cylinder Head
	Note:	**299547** Cover–Cyl. Shield Uses: **93542** Nut–Clip (For mounting to Blower Hsg.) Used on type Nos. 0147, 0148, 0178, 0192, 0193, 0639, 0648, 0649, 0653, 0656.
321	211166	Pulley–V-Belt Starter
	Note:	Pulley, Spacer and Drive Hub used on type Nos. 0123, 0196, 0626 are furnished by equipment manufacturer:– These parts are mounted by using (2) 91386 Screws, (2) 91325 Washers and (2) 90366 Lockwashers.
321A	211555	Pulley–Fan
	Note:	**211739** Pulley–Fan Used on type Nos. 0148, 0178, 0192, 0193, 0648, 0649, 0653, 0656.
323	67918	V-Belt
	Note:	**68878** V-Belt Used on type Nos. 0118, 0147, 0159, 0186, 0618. **68898** V-Belt Used on type No. 0656. **280032** V-Belt Used on type Nos. 0148, 0193.
324	221851	Screen–Rotating
	Note:	**93158** Screw is used to mount Flywheel Shrouds (furnished by equipment manufacturer) on type Nos. 0123, 0626. **220802** Screen (Mounted to Flywheel) **220803** Support–Screen **230397** Spacer (4) **93125** Screw (4) **67632** Washer–Plain (4) Used on type Nos. 0121, 0140, 0184, 0189, 0199, 0200, 0619, 0642, 0655, 0660, 0661, 0666.
		221067 Screen–Rotating Uses: **91325** Washer–Mounting Used on type Nos. 0632, 0652. **222044** Screen–Rotating Used on type Nos. 0148, 0178, 0192, 0193, 0648, 0649, 0653, 0656. **222283** Screen–Rotating Used on type Nos. 0627, 0630, 0665.
325	299308	Pulley and Screen–Electric Starter
	Note:	Screen used on type No. 0123 is furnished by the equipment manufacturer.
328	221531	Guard–Belt
	Note:	**222062** Guard–Belt Uses: **222067** Bracket–Guard Support **93593** Nut–Support Bracket Mtg. **93163** Screw–Support Bracket to Guard Mtg. Used on type No. 0656.
329	93294	Screw–Belt Guard Mounting Sem
	Note:	**93158** Screw–Sem Used on type No. 0656.
332	230674	Nut–Flywheel
333	298968	Armature Assembly
334	93381	Screw–Armature to Mounting Bracket Sem
337	298809	Plug–Spark (1-1/2" High–38 M. M.)
	Note:	Spark Plugs 298809, 29693, 291835 and 293918 use Spark–Plug Terminal No. 221798. **29693** Plug–Spark (2" High–51 M. M.) **291835** Plug–Spark Used on type Nos. 0131, 0137, 0150, 0152, 0165. **293918** Plug–Spark Used on type Nos. 0022, 0151, 0155, 0174, 0177, 0199, 0522, 0647.
339	298185	Breaker Assy.–Ignition
340	26018	Spring–Breaker Arm
342	298125	Plunger–Contact

243430 to 243475

REF. NO.	PART NO.	DESCRIPTION
343	298060	Condenser
345	211327	Cover–Breaker
346	93400	Screw–Breaker Cover Mounting Sem
347	220197	Switch–Stop
	Note:	**293739** Switch–Stop Used on type Nos. 0657, 0660.
348	221976	Switch–Stop
353	92791	Washer–Lock–Shakeproof
354	90576	Nut–Hex. –8-32
356	391115	Wire–Ground
	Note:	**299656** Wire–Ground (Ignition Switch to Breaker Box) Used on type Nos. 0023, 0129, 0135, 0146, 0163, 0183, 0523, 0637, 0640, 0658, 0662. **299907** Wire–Ground Used on type Nos. 0168, 0175, 0179, 0628, 0629.
357	91540	Key–Pulley Mounting
358	299101	Gasket Set
362	291630	Shield–Spark Plug
	Note:	**89742** Shield–Spark Plug Used on type No. 0161.
363	19068	Puller–Flywheel (Optional Accessory)
383	89838	Wrench–Spark Plug
406	261173	Spring–Breather Tube
423	93410	Screw–Cable Clamp
445	390930	Cartridge–Air Cleaner
451	90364	Washer–Lock–No. 8 x 3/64 x 1/32"
492	297779	Starter–Generator (Delco-Remy No. 1101864 and Pulley–Delco-Remy No. 1949358)
493	211169	Bracket–Lower Starter
	Note:	**211785** Bracket–Starter Used on type Nos. 0618, 0648, 0649; also used after Code No. 6808271 on type Nos. 0118, 0147, 0148, 0159, 0178, 0186, 0192, 0193. **211617** Bracket–Starter Used before Code No. 6808281. Used on type Nos. 0118, 0147, 0148, 0159, 0178, 0186, 0192, 0193.
500	91325	Washer–Strap to Bracket and Strap to Generator Mounting
501	295924	Regulator–Voltage (Delco-Remy No. 1118988)
	Note:	**297196** Regulator–Voltage (Delco-Remy No. 1119577) Uses: **297197** Clamp (Regulator to Generator) **298578** Wire (Regulator to Generator) Used on type Nos. 0023, 0129, 0135, 0137, 0146, 0163, 0523, 0637, 0658, 0662.
506	90072	Screw–Machine, Fill. Hd. –8-32 x 5/8"
507	66895	Insulator
	Note:	**299598** Insulator Used on type Nos. 0168, 0175, 0179.
517	22809	Pulley–Rope Starter
518	69932	Rope–Starter
	Note:	**295904** Rope–Starter Used on type No. 0137.
520	93722	Terminal–Spade
521	291508	Shielding–Ignition Cable
523	390947	Cap and Dipstick–Oil Filler
	Note:	**299385** Cap and Dipstick–Oil Filler Used on type Nos. 0147, 0197. **390836** Cap Assy.–Oil Filler Uses: **65304** Gasket Used on type Nos. 0196, 0626, 0627, 0630, 0665.
524	68838	Seal–Filler Tube
525	390948	Tube–Oil Filler
	Note:	**93687** Nipple–Oil Filler Used on type Nos. 0196, 0626, 0627, 0630, 0665. **230472** Nipple–Oil Filler Used on type Nos. 0123, 0176. **299400** Tube–Oil Filler Used on type Nos. 0147, 0197.
535	270782	Element–Air Cleaner
535A	270093	Element–Air Cleaner
536	391063	Cleaner Assembly–Air
	Note:	**67247** Gasket–Air Cleaner Mtg. Used on type No. 0625, 0666.
536A	299709	Cleaner Assembly–Air
	Note:	**291858** Cleaner Assy.–Air (Oil Bath) Uses: **27401** Gasket–Cover to Body **67247** Gasket–Air Cleaner Mtg. Used on type No. 0189. **297869** Cleaner Assy.–Air Used on type No. 0122.
550	*22353	Washer–Valve Cover
551	22795	Cover–Valve
552	23837	Bushing–Governor Crank
553	62222	Cup–Valve Spring
554	66203	Shaft–Cam
556	90887	Screw–Cap, Hex. Hd. –3/8-16 x 1-1/4"
557	90931	Screw–Cap, Hex. Hd. –1/2-20 x 2-1/4"
558	92268	Washer–Lock–3/8 x 1/8 x 3/32"
559	93294	Screw–Sem
	Note:	**93415** Screw–Sem **62199** Washer–Flat Used to mount control Lever to Cylinder on type Nos. 0148, 0178, 0192, 0193, 0648, 0649, 0653, 0656.
560	91984	Pin–Cotter–1/16 x 1/2" long
561	92278	Nut–Hex. –1/4-20
562	92613	Bolt–Governor Lever
564	92980	Screw–Cap, Hex. Hd. –1/4-20 x 1/2"
565	93142	Screw–Bracket to Base Mounting
567	291364	Crank Assy.–Governor
568	291404	Base Assy.–Engine
	Note:	Base used on type No. 0147 is furnished by the equipment manufacturer. **294751** Base Assy.–Engine Used on type Nos. 0020, 0023, 0129, 0132, 0135, 0137, 0146, 0160, 0163, 0164, 0183, 0194, 0195, 0197, 0199, 0520, 0522, 0632, 0637, 0640, 0644, 0651, 0652, 0658, 0662. **298398** Base Assy.–Engine Used on type Nos. 0123, 0176.

REF. NO.	PART NO.	DESCRIPTION
		391165 Base Assy.–Engine Used on type Nos. 0147, 0196, 0620, 0626, 0627, 0630, 0639, 0653, 0656, 0657, 0660, 0665.
569	***27351**	Gasket–Engine Base
571	**291672**	Support Assy.–Ball Bearing
572	**291871**	Guide–Front Air
573	**298159**	Plate–Back
574	**295158**	Ammeter (Stewart Warner No. 357-W)
	Note:	**298586** Holder–Charge Indicator Lamp **67245** Lamp–Charge Indicator (#1893, T-3 1/4 Bulb Miniature Bayonet Base 14 Volt) Used on type Nos. 0129, 0135, 0146, 0163, 0523, 0637, 0658, 0662.
575	**299139**	Switch–Starter
	Note:	**298590** Switch–Ignition Uses: **298579** Wire–Ignition Switch to Indicator Lamp **298580** Wire–Ignition Switch to Ground **298581** Wire–Ignition Switch to Breaker Box **221745** Panel–Instrument Uses: **93535** Screw–Sem **91325** Washer–Flat To mount Panel to Generator Used on type Nos. 0023, 0129, 0135, 0146, 0163, 0183, 0523, 0637, 0640, 0658, 0662.
576	**295160**	Wire–Ammeter to Switch
577	**295161**	Wire–Ammeter to Regulator
578	**295162**	Wire–Starter Switch
	Note:	**298583** Wire–Starter Switch to Generator **298582** Wire–Starter Switch to Ignition Switch and "Bat." Terminal on Regulator Uses: **91397** Nut–Hex.–5/16-18 **90366** Washer–Lock Used on type Nos. 0023, 0129, 0135, 0146, 0163, 0523. 0637, 0658, 0662. **390237** Wire–Starter Switch to Generator Used on type Nos. 0183, 0640.
586	**22906**	Lock–Flywheel Nut
587	**221340**	Clamp–Cable
587A	**220509**	Clamp–Cable
588	**211440**	Bracket–Armature Mounting
589	**93473**	Screw–Armature Bracket to Cylinder Mounting Sem
590	**93171**	Screw–Breaker Mtg. Sem
591	**65932**	Plug–Camshaft
592	**90356**	Nut–Hex.–10-24
593	***27349**	Gasket–Plain or Ball Brg. Sup.–.020" Thick
	***27374**	Gasket–Plain or Ball Brg. Sup.–.005" thick
	***27375**	Gasket–Plain or Ball Brg. Sup.–.009" thick
601	**93053**	Clamp–Fuel Pipe
605	**297171**	Bracket–Guard
606	**221442**	Strap–Adjusting
	Note:	Upper Brackets used to mount Generator on type Nos. 0148, 0178, 0192, 0193, 0648, 0649, 0656 are furnished by the equipment manufacturer. For mounting Pivot Bracket to Upper Bracket use: **90366** Washer–Lock **91325** Washer–Flat (2) **91397** Nut–Hex. **92271** Screw–Cap **221931** Strap–Adjusting **221932** Bracket–Upper **221933** Brace–Angle **93535** Screw–Sem **91397** Nut–Hex.–5/16-18 (2) **91325** Washer–Flat (2) Used on type Nos. 0118, 0147, 0159, 0186, 0618.
608	**298340**	Starter Assy.–Rewind
635	**66538**	Elbow–Spark Plug
636	**92864**	Washer–Lock
637	**66154**	Washer–Back Plate Terminal
638	**26404**	Washer–Back Plate Terminal
639	**270176**	Gasket–Breaker Cover
640	**298141**	Lead–Primary
642	**222271**	Cover–Air Cleaner
642A	**221468**	Cover–Air Cleaner
643	**222272**	Cup–Air Cleaner
643A	**280001**	Cup–Air Cleaner
644	**221755**	Base–Air Cleaner
	Note:	**22338** Base–Air Cleaner Uses: **67247** Gasket Air Cleaner (Between Pipe and Base) Used on type Nos. 0122, 0171.
645	**230775**	Bushing–Plunger
646	**221472**	Brace–Bracket
647	**211170**	Link–Anchor
648	**91439**	Screw–Cap, Hex. Hd.–1/4-20 x 3/8"
649	**93546**	Screw–Cap, Hex. Hd.–5/16-18 x 1-1/4"
650	**91814**	Screw–Cap, Hex. Hd.–3/8-16 x 2"
	Note:	**93546** Screw–Cap, Hex. Hd.–5/16-18 x 1-1/4" Used to mount Starter Bracket to Cylinder on type Nos. 0118, 0147, 0148, 0159, 0178, 0186, 0192, 0193, 0648, 0649.
651	**92034**	Screw–Cap, Hex. Hd.–5/16-18 x 1/2"
652	**91162**	Screw–Bracket to Bracket
653	**91442**	Screw–Pulley Mtg.
	Note:	**91386** Screw–Cap **91325** Washer–Plain **90366** Washer–Lock Used on type No. 0123.
654	**230783**	Nut–Contact Point Adjusting Screw
655	**221014**	Anchor–Spring
661	**91203**	Screw–Cap, Hex. Hd.–5/16-18 x 1-3/4"
665	**298860**	Oil Minder
668	**260647**	Spacer (Used between end of Ratchet and Starter Pulley)
694	**91324**	Washer–Belt Guard
697	**91386**	Screw–Pulley Mtg.

* Included in Gasket Set–Part No. 299101.

243430 to 243475

REF. NO.	PART NO.	DESCRIPTION
722	**68768**	Seal—Plunger
723	**93516**	Eyelet—Seal Retainer
724	**221873**	Retainer—Plunger Seal
762	**297800**	Electric Starter—Generator Kit—12 Volt

REF. NO.	PART NO.	DESCRIPTION
	Note:	**298865** Electric Starter Generator Kit—12 Volt Includes: Panel Assy. with Starter Switch, Charge Indicator Light and Ignition Switch
810	**230950**	Extension—Crankshaft

* Included in Gasket Set—Part No. 299101.